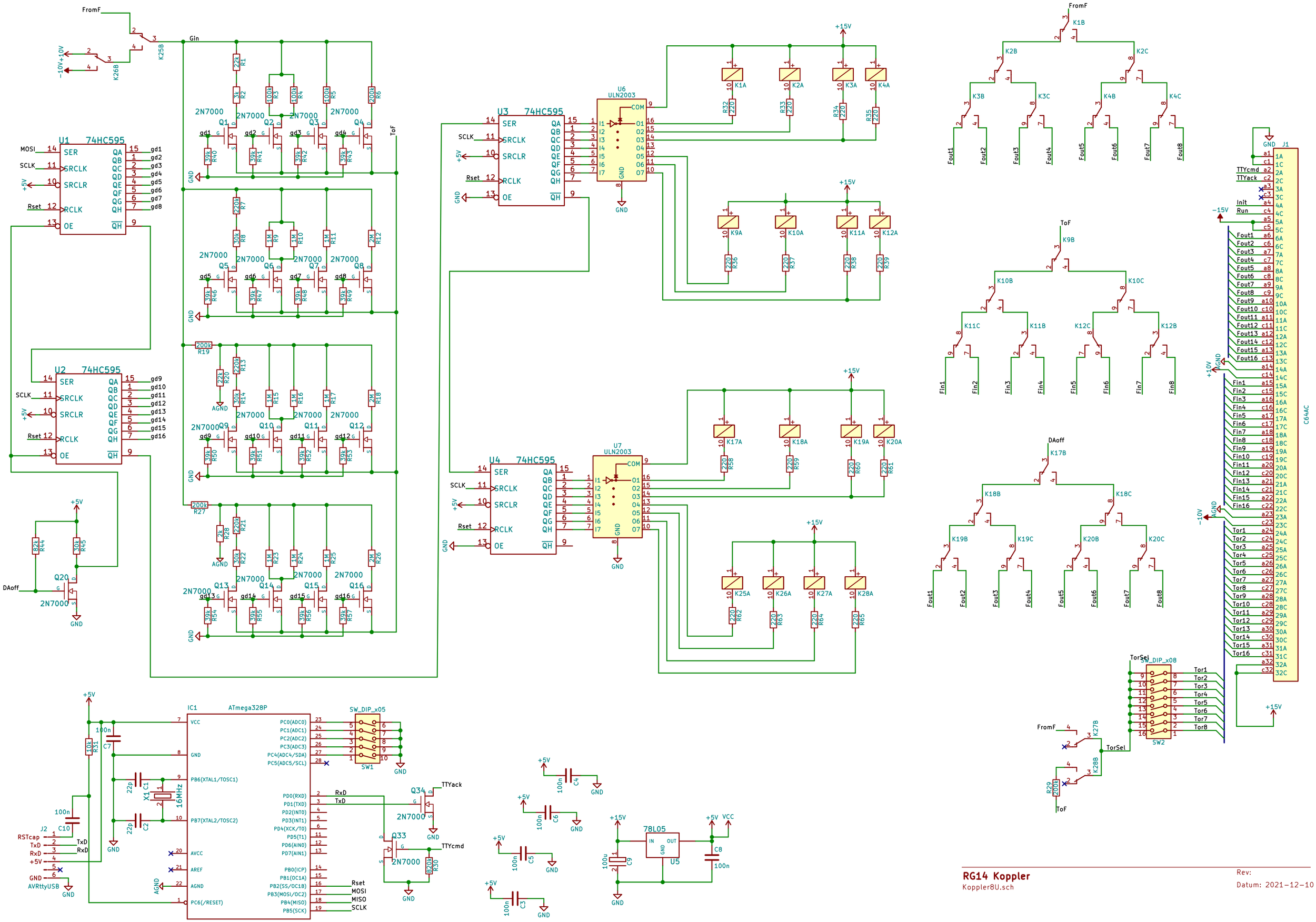


**RG14 Koppler**

Koppler8U.sch

Rev:

Datum: 2021-12-10